EMBRACE hosted IT services.

HP and Intel infrastructure with Enomaly software

Better service for customers, better benefits for you

Solution brief

Predictions often come true

As an IT service provider, you've probably been reading about the Cloud Services market for quite some time. And you probably know that Cloud Services is a very effective model for delivering hosted solutions to end-user customers.

But did you know that Gartner predicts the trend of hosting IT services to grow significantly in the next two years? In fact, Gartner says that by 2012, 20% of all companies will own no IT assets. These forward-looking companies will lease their compute cycles and IT-related services from a hosting provider. Like you.

To offer the best services to customers, you need the best infrastructure. And today, that means a flexible, modular infrastructure from HP and Intel®, running advanced automation and virtualization applications from Enomaly.

Your business challenges resolved

Our hosting solutions enable you to offer timely, comprehensive services to your customers—whether through shared hosting, dedicated hosting, virtual/cloud hosting or managed services. HP's flexible, energy-efficient Intel Xeon® processor- based server, storage and networking solutions—coupled with Enomaly software solutions—help you overcome your primary business challenges:

- Lower costs by increasing the density of sites per server
- Increase average revenue per user by offering more hosting services and/or up-sell the customer to purchase additional services
- Increase predictability of capacity planning for the service and understand the relationship of capacity to service level performance
- Automate the user experience and empower the end-user

Focus on our partner – Enomaly

A complete "cloud in a box" solution, Enomaly Elastic Computing Platform, Service Provider Edition (ECP SPE), enables hosting providers to deliver revenue-generating Infrastructure-on-Demand cloud computing services to their customers from their own data centers with a feature set that includes:

- **Self-service user interface to empower customers with maximum business agility** – A simple, but powerful, self-service portal provides real-time monitoring and complete command and control capabilities over the cloud infrastructure.
- **Rich integration with existing infrastructure** – ECP provides a rich customer-facing Application Programming Interface (API), for automated management, as well as an Administrative & Operations API for easy integration with back-end provisioning and billing systems.
- **Streamlined, low-touch operational model** – ECP is operationally resilient against node failures, network partitions and network degradation.
- **Strong multi-tenant security** – ECP provides fine-grained, multi-level access controls, enabling each user to access and manage only their own resources. A separate High Assurance Edition adds unique hardware-based security mechanisms to deliver security capabilities never before available in the cloud, and strong enough to meet the highest customer requirements.
- **High availability** – ECP provides failover-as-a-service for every customer application, providing resiliency against equipment failures.
- **Unlimited scalability** – ECP's carrier class architecture supports very large cloud platforms involving thousands of servers and spanning multiple data centers in disparate geographies.

Let's talk

To learn more about hosting services from HP and Enomaly, call your authorized HP reseller or visit www.hp.com/go/exso.

enomaly elastic computing

hp

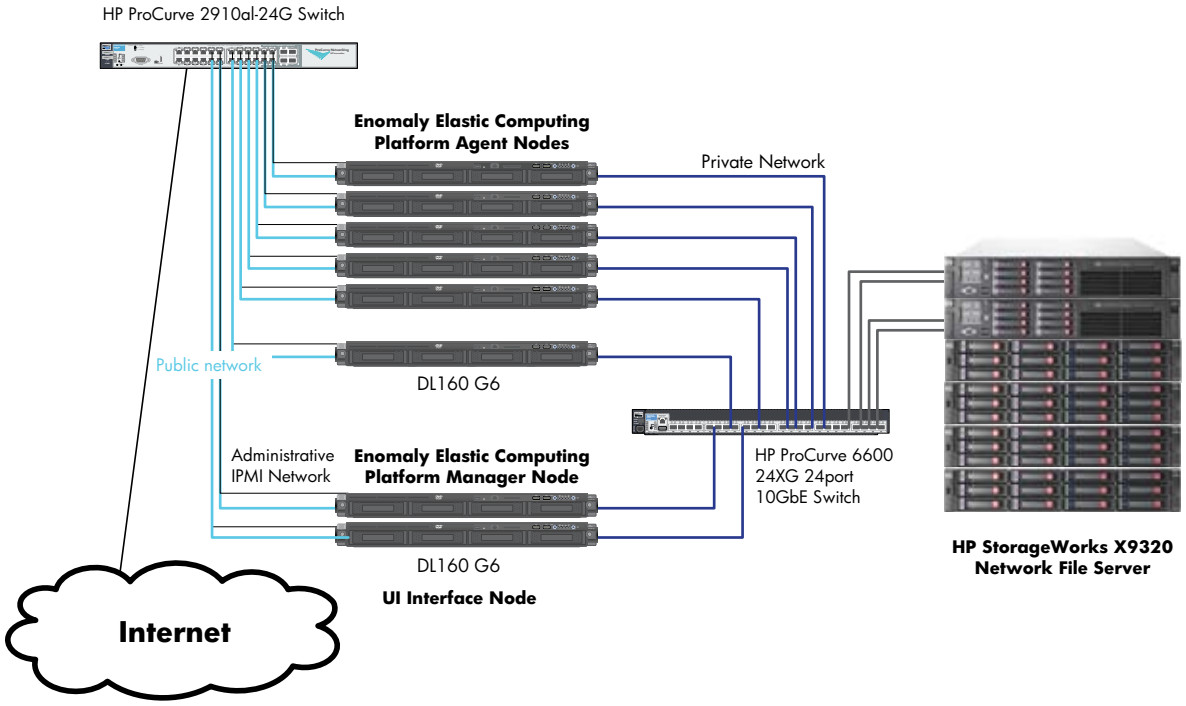

HP options

HP ProLiant servers with Intel Xeon processors

- **DL servers** – available in entry-level, midsize and high-end models with 1P, 2P and up to 4P configurations; ideal for hosters who need highly efficient, virtualization-ready systems
- **SL servers** – optimized for extreme scale-out solutions, help you greatly reduce costs by maximizing power efficiency and sharing power supplies and fans, while maintaining total flexibility; The Intel Xeon processor 5600 series automatically regulate power consumption and intelligently adjust server performance according to your application needs.
- **HP BladeSystem** – maximize power efficiency and system configuration flexibility; offering ultimate in management and automation through HP Insight Foundation Suite, Insight Dynamics and Virtual Connect Flex-10

HP StorageWorks storage systems

- **HP MSA2000i** – featuring the latest technology at a very affordable price; ideal choice for consolidating storage, meeting tight budgets or supporting hundreds of customers
- **HP LeftHand P4000 SANs** – feature-rich alternative to generic iSCSI; easy to deploy, scale and maintain; provides unique double-fault protection across the entire storage area network to reduce vulnerability without driving up costs
- **HP X9000 Network Storage File System** – highly versatile and massively scalable storage solutions; ability to store up to 16 petabytes of information; can dynamically grow without impacting service

HP ProCurve Networking solutions

– We have a roadmap for an edge-to-core networking portfolio with acquisition of 3COM.

- **ProCurve Switch 2910al series** – entry-level switch connects servers and uplinks them to the core/distribution layer; power supply redundancy requires an external power supply
- **ProCurve Switch 6600 series** – high-density switches in a small 1U form factor; offer hot-swappable power supplies and fans, high redundancy and high performance—all at a low cost
- **ProCurve Switch 5400/8200 series** – modular, high-density, high-end switches; good choice for hosters that need more than 96 ports at 1G; include redundant, hot-swappable power, fans and modules

HP Financial Services

- Flexible purchase and lease programs to meet your budget and your needs
- Finance the purchase of HP infrastructure and independent software vendors-specific software, a cost-savings benefit to minimize capital expenses

Share with colleagues

Become a fan on »

Follow on twitter »

Get connected

www.hp.com/go/getconnected

Get the insider view on tech trends, alerts, and HP solutions for better business outcomes

© Copyright 2010 Hewlett-Packard Development Company, L.P. The information contained herein is subject to change without notice. The only warranties for HP products and services are set forth in the express warranty statements accompanying such products and services. Nothing herein should be construed as constituting an additional warranty. HP shall not be liable for technical or editorial errors or omissions contained herein.

Intel and Xeon are trademarks of Intel Corporation in the U.S. and other countries.

4AA1-6928ENW, Created June 2010

This is an HP Indigo digital print.